TRITEC

energy for a better world

INSTALLATION INSTRUCTIONS TRI-STAND

On-the-roof mounting system for pitched roofs, flat roofs and building exteriors

- **Optional as insertion or clip system**
- **Colour choice: natural or black**
- **Certificated for wind and snow loads**
- **Tested for statics**

Contents

1 BASICS

1.1 Notes

For the installation of the TRI-STAND mounting system only products from the range of the TRI-STAND mounting system must be used. Using third-party components can result in adverse effects on the system's stability and in major damages.

The system may only be installed by trained and skilled personnel. We do not assume any liability for damages arising from the use of third-party components or from incorrect installation.

Flat systems which are only fastened by ballast on the roof must be additionally secured by the customer against horizontal shifts due to temperature changes. That may be supports on the attic, for example; or additional points of attachment along the highest points. For systems on Renosol plates, gravel cover or on green roofs, any horizontal displacement is adequately secured.

Required screw torques:
SafeClick 20 Nm
M10 threaded joints truss head, hammer head and hexagonal screws: 30 Nm
M8 threaded joints: 20 Nm

1.2 Load effect

In addition to the dead weight of the photovoltaic system, mainly wind and snow loads affect the system components and the substructure. For this reason, each system must be calculated and planned for your individual requirements and external influences, taking into consideration DIN 1055* (Actions on Structures).

The stresses by wind loads depend mainly on the wind zone (according to DIN 1055-4*), the building's height, the shape and slope of the roof as well as the position of the roof's centre. Weight stresses through snow load are dependent on the snow zone (according to DIN 1055-5*), the building's height, the shape and slope of the roof and the position of the roof's centre.
For each location the wind and snow load zone can be determined, which will determine the dimensioning of the system.

*European standard: EN 1991-1-3

1.3 Structural notes

Considering the structure, special attention must be paid to the structural calculations of the roof, substructure or building exterior.
On principle, the structural calculations of all roofs must be checked by authorised experts. The main question to be answered is whether the roof can take the additional stresses caused by the solar system. Since the load bearing capacity of a roof and the load effect of a photovoltaic system are determined by many factors, structural calculations must be made for each roof individually. The current condition of the roof must be such, that renovation will not become necessary for a period of at least 20 years.

1.4 Dimensioning Software

The TRI-DESIGN dimensioning software calculates and designs the TRI-STAND mounting system according to the standards of DIN 1055*. The relevant directives are DIN 1055-4* for wind loads and DIN 1055-5* for snow and ice loads, which affect the photovoltaic system and its substructure.
In addition to the number of roof hooks to be used, the dimensioning software also calculates the distances of the guide rails and the maximum span width of the various profiles.
The dimensioning software allows us to design the system optimally for the individual roof and thus to select the best version of the mounting system.

Under warranty terms and conditions all TRI-STAND systems must be dimensioned using the TRI-DESIGN dimensioning software.

1.5 Overview system components

Pitched roof

1 Roof hook
2 UP universal profiles
3 TS insertion profiles
4 SafeClick SC

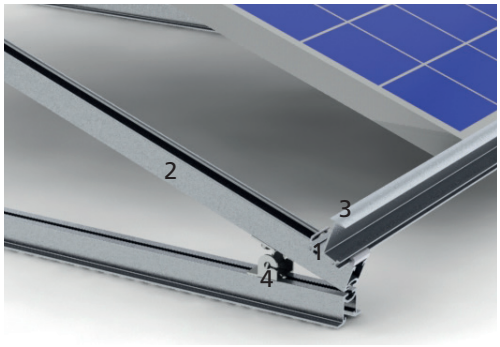

Flat roof

1 SafeClick SC
2 UP universal profiles
3 TS insertion profiles
4 FlexFix

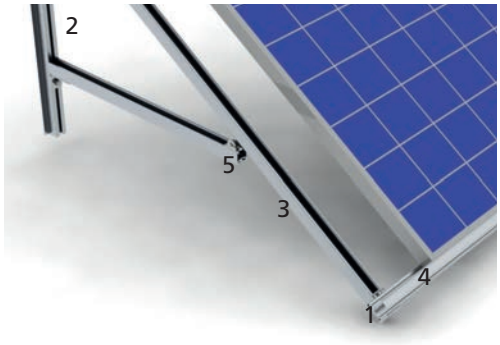

Building exterior

1 SafeClick SC
2 UP-S universal profile
3 UP universal profile
4 TS insertion profile
5 FlexFix

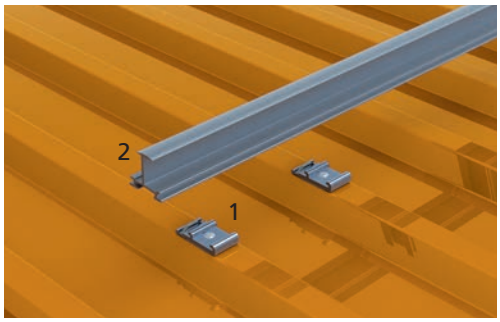

Trapezoidal sheet roof

1 Rivetted SafeClick SC
2 TS insertion profile / UP-TS universal profile

2 PITCHED ROOF

Installation on pitched roof

Depending on the system design, the mounting system can be installed on pitched roofs in two different ways. Insertion of the modules in profiles with cross bracing is the more stable and user-friendly version, though some module manufacturers stipulate the clip installation. Below we will first explain the installation with cross bracing and then the clip system with universal profiles and middle and end clips.
The dimensioning software TRI-DESIGN helps to select the right version of installing the modules for each project.

2.1 INSERTION SYSTEM

2.1.1 Tools

The following tools are required:
- Cordless screwdriver with Torx 40
- Flat spanner 15 mm
- Allen key 3 mm hexagon socket
- Allen key 5 mm hexagon socket
- TRI-STAND Bending Tool (see Annex)

Cross bracing

2.1.2 Installing the mounting system

The installation can be divided into three steps:
1. Installation of the vertical universal profiles UP, UP-L or UP-S
2. Attaching the horizontal TS insertion profiles
3. Laying of cables and insertion of modules

1. Installation of the vertical universal profiles UP, UP-L or UP-S
In general, there are two ways to install the photovoltaic system on the roof. On tile roofs, the system is installed with roof hooks. Hanger bolts are used for trapezoidal roofs and corrugated fibre cement plates. Below we will first describe the installation with roof hooks, then the installation with hanger bolts. When the universal profiles are fixed in place, the further installation is identical.

Installation with roof hooks
After the substructure of the roof has been checked for its point bearing capacity, the roof hooks are installed at the points set out in the project plan. The hooks are mounted in one line in vertical direction. It is to be taken into account here that every roof hook is fixed in place with at least two wood screws – one on the upper row, one on the lower row.
Then the universal profiles UP, UP-L or UP-S are installed on the roof hooks in vertical direction. The project plan sets out which of the three profiles is to be used, since the different profiles fulfil different static requirements. Universal profiles UP and UP-L are used for structures with normal static loads, universal profiles UP-S for especially high loads.

Roof hook

Installation of universal profiles

Hanger bolts

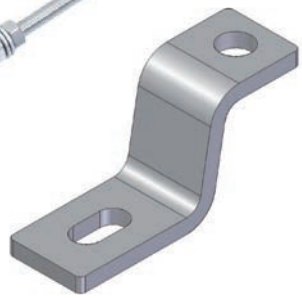

Z adapter UP-Z

Universal rail connector UP-C

Connecting the SafeClick SC

To affix the universal profiles, the head of the round-head screw is inserted into the profile and pushed to the position of the roof hook. Now the universal profiles can be affixed to the roof hook with self-locking nuts with serrated bearing surface. Alternatively to round-head screws, hammer head bolts M10 may be used.

Installation with hanger bolts

After the substructure of the roof has been checked for its point bearing capacity, the hanger bolts are installed at the points set out in the project plan. The bolts must be installed in a straight line in vertical direction, and it is important that the hanger bolts are screwed into the roof joists vertically. The bearing surfaces of the elongated holes on Z-adapters must be adjusted to one height level over the entire surface of the roof. This can be done via the threaded part of the hanger bolts.

Then the universal profiles UP, UP-L or UP-S are prepared for the installation in the hanger bolts. The project plan sets out which of the three profiles is to be used. Universal profiles UP and UP-L are used for structures with normal static loads, universal profiles UP-S for especially high loads.

The heads of the round-head screws are inserted into the universal profiles and pushed to the places of the Z-adapters. Subsequently, the profile with the round-head screws is passed into the elongated holes of the Z-adapters and fastened with the self-locking nuts with serrated bearing surface. Hammer head bolts M10 can be used alternatively to the round-head screw.

Attention: Z-adapters must face upwards in the direction of the roof ridge.

Connection of the universal profiles UP, UP-L or UP-S

To connect the rails, the universal rail connector UP-C is required. This is equipped with two round-head screws and self-locking nuts with serrated bearing surface in such a way, that the heads of the round-head screws can be inserted into each of the profiles. When the nuts have been tightened, the profiles are firmly connected. For systems deeper than 12 m, the UP-C connector may be tightened unilaterally only. Moreover, a 5 mm air space between universal profiles is to be taken into account to keep tension in the profiles low in case of fluctuating temperatures.

2. Attaching the horizontal TS insertion profiles

To attach the horizontal TS profiles to the vertical UP-L, UP or UP-S profiles, TRI-STAND SafeClick SC are mounted to the universal profiles with the aid of a spacer gauge. The length of the spacer gauge is equivalent to the module insertion length minus 5.75 cm or can be gathered from the TRI-DESIGN dimensioning. Once all SafeClicks are attached (also for any middle rails), the TS profiles can be clicked into place from the top. When the TS profile is clicked into the SafeClick, both rails are firmly connected.
By means of the TS bending tool, the TS-profiles must now each be edge-trimmed to the left and right of a SafeClick located in the middle of the rail. This measure will limit any subsequent creeping of the rails due to heat and cold.

Insertion rail connector TS-C

End bracket TS-E

Middle rail TS-M

Cross cable clip block UP-K

Edge clip TS-EC

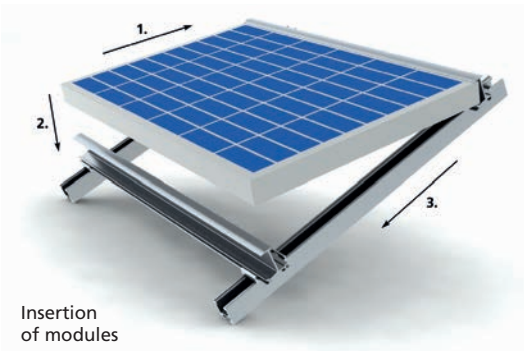

Insertion
of modules

Connecting the TS profiles

In order to connect two TS profiles, the insertion rail connector TS-C is required. With the setscrew oriented towards the bottom, the TS-C connector is pushed into an installed TS profile until it is flush with the TS profile. Subsequently, the next TS profile is installed with a 3 mm space to the one before; the TS-C connector is pushed into the new TS profile up to its centre marking and then unilaterally connected with a setscrew. With this type of connection, the TS profiles are able to expand or contract relatively stress-free in hot or cold conditions, and the modular loads will be transmitted nonetheless.

Facing of TS profiles

The edges of TS profiles are faced using the TS end brackets TS-E. These are inserted at both ends of the TS profile and fixed in place with set screws. By means of this rail facing the modules will not slide out of the profiles even in bad weather.

Installation of the middle rail TS-M

For the upright installation of modules it is important to note that some manufacturers stipulate the use of a middle rail with module loads of 2400 N/m² to 5400 N/m² (respectively 0 N/m² to 2400 N/m² with certain module types). These middle rails are installed in the system in parallel to the TS rails and serve as a middle support for the installed solar modules. The middle rail is installed in the universal profiles with SafeClick. The middle rails are clicked into the installed SafeClicks. As with the extension of TS profiles, here extension is also carried out with the insertion rail connectors TS-C.

3. Laying of cables and insertion of modules

In general, all cables are laid in parallel to the installed rails. They are attached to the universal profiles UP, UP-L or UP-S using cross cable clip blocks UP-K, which are inserted into the profile and fixed in place by turning them by 90°.

The cables are affixed to the TS profiles with the TRI-STAND edge clips TS-EC. These are directly clipped to the TS profile. Now the cables can be affixed to the rails using again cable clips.

Once all cables have been laid, the modules are inserted. In order to connect the cables, the modules are placed onto the bottom TS profiles. This way they can easily be interconnected.

Now the modules are inserted into the mounting system in three steps.

First, the modules are inserted into the top TS profile and then laid down on the lower profile. Finally, the solar modules are inserted into the lower profile. They are now held in place by gravity and must not be fixed in place by screws.

2.2 CLIP SYSTEM

2.2.1 Tools

The following tools are required:

- Cordless screwdriver with Torx 40
- Flat spanner 15 mm
- Allen key 6 mm hexagon socket

Clip system

2.2.2 Installing the mounting system

The clip installation divided into two steps:

1. Installation of the horizontal universal profiles UP, UP-L or UP-S
2. Laying of cables and clipping of modules

1. Installation of the horizontal universal profiles UP, UP-L or UP-S

In general, there are two ways to install the photovoltaic system on the roof. On tile roofs, the system is installed with roof hooks. Hanger bolts are used for trapezoidal roofs and corrugated fibre cement plates. Below we will first describe the installation with roof hooks, then the installation with hanger bolts. When the universal profiles are fixed in place, the further installation is identical.

Roof hook

Installation with roof hooks

After the substructure of the roof has been checked for its point bearing capacity, the roof hooks are installed at the points set out in the project plan. The hooks are mounted in one line in horizontal direction. It is to be taken into account here that every roof hook is fixed in place with at least two wood screws – one on the upper row, one on the lower row.

Then the universal profiles UP, UP-L or UP-S are installed on the roof hooks in horizontal direction. The project plan sets out which of the three profiles is to be used, since the different profiles fulfil different static requirements. Universal profiles UP and UP-L are used for structures with normal static loads, universal profiles UP-S for especially high loads.

Universal profile
UP and UP-S

To affix the universal profiles, the head of the round-head screw is inserted into the profile and pushed to the position of the roof hook. Now the universal profiles can be affixed to the roof hook with self-locking nuts with serrated bearing surface. Hammer head bolts M10 A2 can be alternatively used for fastening the universal profiles.

Installation with hanger bolts

After the substructure of the roof has been checked for its point bearing capacity, the hanger bolts are installed at the points set out in the project plan. The bolts must be installed in a straight line in horizontal direction, and it is important that the hanger bolts are screwed into the roof joists vertically. The bearing surfaces of the elongated holes on Z-adapters must be adjusted to one height level over the entire surface of the roof. This can be done via the threaded part of the hanger bolts.

Hanger bolts

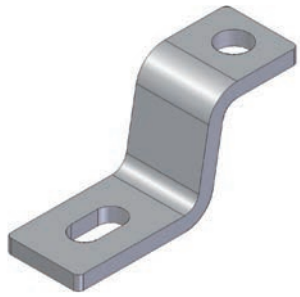

Z adapter UP-Z

Universal rail connector UP-C

Cross cable clip block UP-K

End clip

Middle clip

Then the universal profiles UP, UP-L or UP-S are prepared for the installation in the hanger bolts. The project plan sets out which of the three profiles is to be used. Universal profiles UP and UP-L are used for structures with normal static loads, universal profiles UP-S for especially high loads.

The heads of the round-head screws are inserted into the universal profiles and pushed to the places of the Z-adapters. Subsequently, the profile with the round-head screws is passed into the elongated holes of the Z-adapters and fastened with the self-locking nuts with serrated bearing surface. Hammer head bolts M10 can be used alternatively to the round-head screw.

Attention: Z-adapters must face upwards in the direction of the roof ridge.

Connection of the universal profiles UP, UP-L or UP-S

To connect the rails, the universal rail connector UP-C is required. This is equipped with two round-head screws and self-locking nuts with serrated bearing surface in such a way, that the heads of the round-head screws can be inserted into each of the profiles. When the nuts have been tightened, the profiles are firmly connected. As of a rail length of 12 m, the module field must be completely separated to keep tension in the modules low in case of fluctuating temperatures.

2. Laying of cables and clipping of modules

In general, all cables are laid in parallel to the installed rails. They are attached to the universal profiles UP, UP-L or UP-S using cross cable clip blocks UP-K, which are inserted into the profile and fixed in place by turning them by 90°. Now the cables are affixed to the profiles directly using cable clips.

Once all cables have been laid, the solar modules are clipped into place. First end clips are attached to one end of the universal profiles. These are inserted into the profile from above and fixed in place by turning them by 90°. Now the module is inserted from the side and fixed in place by tightening the Allen screw. It is important that the height of the end brackets corresponds precisely with the height of the module frames.

When the first module with the matching end clips has been affixed to the outside, the middle clips are installed. These are also inserted into the profile and fixed in place by turning them by 90°. After the next module has been inserted, both modules are fixed in place by tightening the Allen screw. These steps must be repeated until the last module in a row. This is again fixed in place with a matching end clip.

3 FLAT ROOF AND PITCHED ROOF ELEVATION

Installation on flat roof

Depending on the system design, the mounting system for installation on flat roofs can be installed in two ways.
The upright installation with an elevation angle of 20° or 30° is a more flexible version, enabling the compensation of any unevenness in the roof. In addition, the upright installation provides benefits regarding the shadowing of modules (through snow, roof covering with vegetation etc.), since the modules have a relatively large distance from the flat roof. This type of installation may only be used for flat roofs with a pitch of -5° to +5°.
The triangle installation is however simpler for a flat roof installation, because only three brackets are required for each triangle. The triangle installation can also be used on pitched roofs up to 20° roof pitch. By using the FlexFix angle, an elevation anlge between 20° and 70° can be selected.
For any roof pitch of < or = 5°, both installation variations can be selected in the dimensioning software.

3.1 UPRIGHT INSTALLATION

3.1.1 Tools

The following tools are required:
- Cordless screwdriver with 7mm drillbit
- Riveting tool
- Flat spanner 15 mm
- Flat spanner 17 mm
- Allen key 3 mm and 5 mm hexagon socket
- TRI-STAND Bending Tool (see Annex)

Upright installation

3.1.2 Installing the mounting system

The installation can be divided into three main steps:
1. Installation of the upright installation on the horizontal UP-S basic profile
2. Attaching the horizontal TS insertion profiles
3. Laying of cables and insertion of modules

1. Installation of the upright installation on the horizontal UP-S basic profile
The substructure of a flat roof system can either be riveted to the gravel-bordered Renosol trapezoidal plates or fixed directly to the roof with hanger bolts. Once the substructure is firmly installed on the roof using one of these tow versions, the further installation is identical.

Installation on Renosol trapezoidal plates
For the installation of the Renosol trapezoidal plates it is important that the surface, on which the plates are to be installed, is clean and perfectly even. If there is a risk that the Renosol plates might damage the roof cladding, a fleece or a protective mat must be laid under the plates.
Now the universal profiles UP-S are riveted to the trapezoidal plates as sub-profile and as set out in the project plan. When drilling the 7 mm rivet holes in the centre of the elevations of the Renosol trapezoidal plates, the drill must only protrude from the drill chuck by a maximum of 60 mm, in order to avoid damages to the roof cladding. In addition, when riveting the rails to the Renosol trapezoidal plates, the universal profile must be equipped with a M8 washer. Once the sub-profile is firmly installed, the Renosol trapezoidal plates are surrounded with gravel. The height of the gravel must be adjusted to the

Installation of the Renosol trapezoidal plates

Bracing of support

Connecting the SafeClick SC

Insertion rail connector TS-C

End bracket TS-E

Middle rail TS-M

Laying of cables

local wind and snow loads and is set out in the project plan.

Preassembly of upright installations

The UP upright supports and the inclined profile UP-L, UP or UP-S – selected according to the necessity of statics – can be preassembled in advance with all angles in accordance with the dimensions from the TRI-DESIGN dimensioning. Subsequently, the distances between the angles are sketched onto the UP-S bottom profiles. The supports are now set on and connected with the hammer head bolts M10 x 30 A2.

2. Attaching the horizontal TS insertion profiles

To attach the horizontal TS profiles to the inclined UP, UP-L or UP-S profiles, the TRI-STAND SafeClick SC are mounted on the universal profiles and fastened in the desired place. Clearance between the SafeClicks is the module insertion length minus 5.75 cm. Once all SafeClicks are attached (also for any middle rails), the TS profiles can be clicked into place from the top. When the TS profile is clicked into the SafeClick, both rails are firmly and securely connected. By means of the TS bending tool, the TS profiles are now edge-trimmed per profile to the left and right of a SafeClick located in the middle of the rail. This measure will limit any subsequent creeping of the rails due to heat and cold.

For horizontal stiffening of the systems, the bracing profile (UP) is connected with flat connectors top and bottom on the high upright supports between two supports on the existing screws. One brace must be provided under each TS insertion profile.

Connecting the TS profiles

With the setscrew oriented towards the bottom, the TS-C connector is pushed into an installed TS profile until it is flush with the TS profile. Subsequently, the next TS profile is installed with a 3 mm space to the one before. The TS-C connector is pushed into the new TS profile up to its centre marking and then unilaterally connected with a setscrew. With this type of connection, the TS profiles are able to expand or contract relatively stress-free in hot or cold conditions. The modular loads are transmitted at the same time.

Facing of TS profiles

The edges of TS profiles are faced using the TS end brackets TS-E. These are inserted at both ends of the TS profile and fixed in place with set screws. By means of this rail facing the modules will not slide out of the profiles even in bad weather.

Installation of the middle rail TS-M

For the upright installation of modules it is important to note that some manufacturers stipulate the use of a middle rail with module loads of 2400 N/m² to 5400 N/m² (respectively 0 N/m² to 2400 N/m² with certain module types). These middle rails are installed in the system in parallel to the TS rails and serve as a middle support for the installed solar modules. The middle rail is installed in the universal profiles with SafeClick: The middle rails are clicked into the installed SafeClicks. As with the extension of TS profiles, here extension is also carried out with the insertion rail connectors TS-C.

3. Laying of cables and insertion of modules

In general, all cables are laid in parallel to the installed rails. They are attached to the universal profiles UP, UP-L or UP-S using cross cable clip blocks UP-K, which are inserted into the profile and fixed in place by turning them by 90°. The cables are affixed to the TS profiles with the TS edge clips TS-EC. These are directly clipped to the TS profile. Now the cables are also affixed to

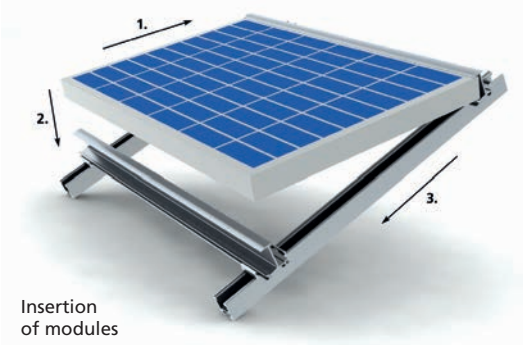

Insertion of modules

the rails using cable clips.

Now the modules are inserted into the mounting system in three steps. First, the modules are inserted into the top TS profile and then laid down on the lower profile. Finally, the solar modules are inserted into the lower profile. They are now held in place by gravity and must not be fixed in place by screws. The modules can now be wired from the rear and connected to the string lines.

3.2 TRIANGLE INSTALLATION

3.2.1 Tools

The following tools are required:

- Cordless screwdriver with 7 mm drillbit
- Riveting tool
- Flat spanner 15 mm
- Allen key 3 mm hexagon socket
- Allen key 5 mm hexagon socket
- TRI-STAND Bending Tool (see Annex)

3.2.2 Installing the mounting system

The installation can be divided into three main steps:

1. Mounting the support triangles on the horizontal UP-S base profile
2. Attaching the horizontal TS insertion profiles
3. Laying of cables and insertion of modules


Triangle installation

1. Mounting the support triangles on the horizontal UP-S base profile

The substructure of a flat roof system can either be riveted to the gravel-bordered Renosol trapezoidal plates or fixed directly to the roof with hanger bolts. Once the substructure is firmly installed on the roof using one of these tow versions, the further installation is identical.

Installation on Renosol trapezoidal plates

For the installation of the Renosol trapezoidal plates it is important that the surface, on which the plates are to be installed, is clean and perfectly even. If there is a risk that the Renosol plates might damage the roof cladding, a fleece or a protective mat must be laid under the plates.

Now the universal profiles UP-S can be riveted to the plates as sub-profile and as set out in the project plan. When drilling the 7 mm rivet holes in the centre of the elevations of the Renosol trapezoidal plates, the drill must only protrude from the drill chuck by a maximum of 60 mm, in order to avoid damages to the roof cladding. In addition, when riveting the rails to the Renosol trapezoidal plates, the universal profile must be equipped with a M8 washer. Once the sub-profile is firmly installed, the Renosol trapezoidal plates are surrounded with gravel. The height of the gravel must be adjusted to the local wind and snow loads and is set out in the project plan.


Installation of the Renosol trapezoidal plates

Installation with hanger bolts

After the roof has been checked for its point bearing capacity, the hanger bolts are installed at the points set out in the project plan. The bolts must be

Hanger bolts

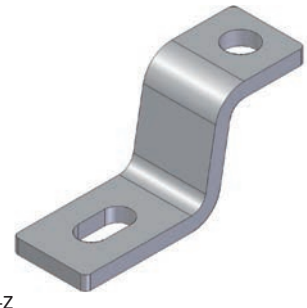

Z adapter UP-Z

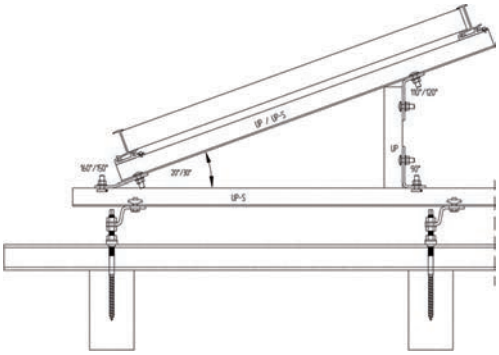

Detail drawing of triangle installation

Bracing of support

Clicking the TS profile

installed in a straight line in horizontal and vertical direction, and it is important that the hanger bolts are screwed into the roof joists vertically. The Z-adapters are mounted on the hanger bolts between the two upper nuts. The bearing surfaces of the elongated holes on Z-adapters must be adjusted to one height level over the entire surface of the roof via the threaded part of the hanger bolts. The hexagonal screws M10 x 25 A2 are now pushed from below into the elongated holes of the Z-adapters and secured from the top by sliding nut M10. Subsequently, the universal profiles are connected with the sliding nut on the Z-adapters. The project plan specifies which of the profiles are used since the various profiles comply with different requirements in statics.

Attention: Z-adapters must face upwards in the direction of the roof ridge.

Installation with roof hooks
The connection is provided on the roof hooks with hexagonal screws M10 x 25 A2 and sliding nuts M10, analogous to the connection on Z-adapters.

Preassembly of triangle installations
The UP upright supports and the inclined profile UP-L, UP or UP-S – selected according to the necessity of statics – can be preassembled in advance with all angles in accordance with the dimensions from the TRI-DESIGN dimensioning. Subsequently, the distances between the angles are sketched onto the UP-S bottom profiles. The supports are now set on and connected with the hammer head bolts M10 x 30 A2.
By means of the TS edging tool, the TS profiles are now edge-trimmed per profile to the left and right of a SafeClick located in the middle of the rail. This measure will limit any subsequent creeping of the rails due to heat and cold.
For horizontal stiffening of the systems, the bracing profile (UP) is connected with flat connectors top and bottom on the high upright supports between two supports on the existing screws. One brace must be provided under each TS insertion profile.

2. Attaching the horizontal TS insertion profiles
In order to attach the horizontal TS profiles to the vertical UP, UP-L or UP-S profiles, SafeClick SC are attached to the universal profiles and affixed at the designated point. The length of the space between the SafeClick is equivalent to the module insertion length minus 5.75 cm or can be gathered from the TRI-DESIGN dimensioning. Once all SafeClicks are attached (also for any middle rails), the TS profiles can be clicked into place from the top. When the TS profile is clicked into the SafeClick, both rails are firmly connected. By means of the TS bending tool, the TS profiles are now edge-trimmed per profile to the left and right of a SafeClick located in the middle of the rail. This measure will limit any subsequent creeping of the rails due to heat and cold.

Connecting the TS profiles
In order to connect two TS profiles, the insertion rail connector TS-C is required. With the setscrew oriented towards the bottom, the TS-C connector is pushed into an installed TS profile until it is flush with the TS profile. Subsequently, the next TS profile is installed with a 3 mm space to the one before. Then the TS-C connector is pushed into the new TS profile up to its centre marking and then unilaterally connected with a setscrew. With this type of connection, the TS profiles are able to expand or contract relatively stress-free in hot or cold conditions. The modular loads will be transmitted nonetheless.

Insertion rail connector TS-C

End bracket TS-E

Middle rail TS-M

Laying of cables

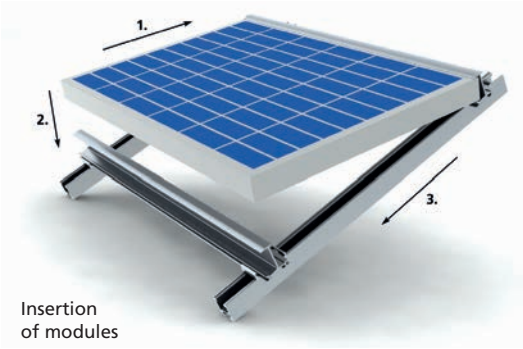

Insertion
of modules

Facing of TS profiles
The edges of TS profiles are faced using the TS end brackets TS-E. These are inserted at both ends of the TS profile and fixed in place with set screws. By means of this rail facing the modules will not slide out of the profiles even in bad weather.

Installation of the middle rail TS-M
For the upright installation of modules it is important to note that some manufacturers stipulate the use of a middle rail with module loads of 2400 N/m² to 5400 N/m² (respectively 0 N/m² to 2400 N/m² with certain module types). These middle rails are installed in the system in parallel to the TS rails and serve as a middle support for the installed solar modules. The middle rail is also installed in the universal profiles with SafeClick: The middle rails are clicked into the installed SafeClicks. As with the extension of TS profiles, here extension is also carried out with the insertion rail connectors TS-C.

3. Laying of cables and insertion of modules
In general, all cables are laid in parallel to the installed rails. They are attached to the universal profiles UP, UP-L or UP-S using cross cable clip blocks UP-K, which are inserted into the profile and fixed in place by turning them by 90°. The cables are affixed to the TS profiles with the TS edge clips TS-EC. These are directly clipped to the TS profile. Now the cables are also affixed to the rails using cable clips.

In order to connect the cables, the modules are placed onto the bottom TS profiles. Once all cables have been laid, the solar modules are inserted into the mounting system in three steps.
First, the modules are inserted into the top TS profile and then laid down on the lower profile. Finally, the solar modules are inserted into the lower profile. They are now held in place by gravity and must not be fixed in place by screws.

4 BUILDING EXTERIOR

Installation on building exterior

For PV systems on building exteriors, the insertion system is applied. Equally to the flat roof installation the flexible angle FlexFix is used, by selecting an elevation angle between 20° and 70° the various conditions of the mounting on building exteriors is taken into account.

4.1 Tools

The following tools are required:

- Flat spanner 15 mm
- Allen key 3 mm hexagon socket
- Allen key 5 mm hexagon socket
- TRI-STAND Bending tool (see Annex)

Installation on building exterior

Horizontal supports

FlexFix 20° – 70°

4.2 Installing the mounting system

The installation of a photovoltaic system on building exteriors with the TRI-STAND mounting system can be divided into three main steps:

1. **Installation of the vertical UP-S profiles on the exterior, mounting and attaching of the UP profiles**
2. **Attaching the horizontal TS insertion profiles**
3. **Laying of cables and insertion of modules**

1. Installation of the vertical UP-S profiles on the exterior, mounting and attaching of the UP profiles

The substructure of the system is to be directly screwed to the building exterior. To this end, the UP-S universal profiles are attached to the building exterior as in the project plan. A firm connection of the installation system with the façade must be ensured, especially with regard to the expected burdens (according to DIN 1055). The corresponding anchoring loads are to be gathered from the TRI-DESIGN dimensioning.

The 90° brackets are now screwed to the vertical UP-S profiles in a straight line. Then the rounded parts of the FlexFix are attached to the UP-S profiles at the intervals set out in the project plan.

The next step is the preparation of the UP profiles. The rounded angle halves are mounted flush at the end of the profile by means of the round-head screw M10x20 A2. One angled FlexFix part each is screwed to the top and bottom of the tilted profiles. By mounting the lower FlexFix the horizontal and tilted profiles can now be connected.

The connected profiles are now inserted into the FlexFix part attached to the building exterior. The horizontal rail can now be simply placed on the 90° angle and screwed fast.

Connecting the SafeClick SC

Insertion rail connector TS-C

End bracket TS-E

Cross cable clip block UP-K

Edge clip TS-EC

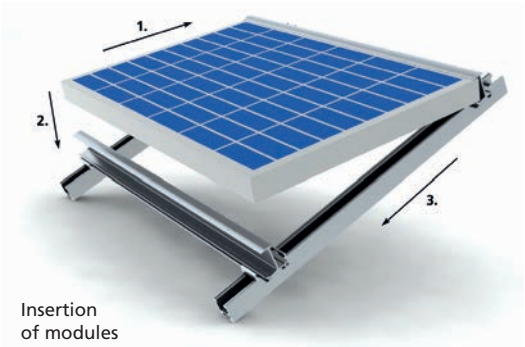

Insertion
of modules

2. Attaching the horizontal TS insertion profiles

In order to attach the horizontal TS profiles to the inclined UP, UP-L or UP-S profiles, TRI-STAND SafeClick SC are attached to the universal profiles and affixed at the designated point. Once all SafeClicks are attached (also for any middle rails), the TS profiles can be clicked into place from the top. When the TS profile is clicked into the SafeClick, both rails are firmly and securely connected. The TS profiles must each be edge-bent per profile left and right of a SafeClick located in the centre of the TS rail. This measure will limit the movement of profiles as a result of temperature changes.

Connecting the TS profiles

In order to connect two TS profiles, the insertion rail connector TS-C is required. With the setscrew oriented towards the bottom, the TS-C connector is pushed into an installed TS profile until it is flush with the TS profile. Subsequently, the next TS profile is installed with a 3 mm space to the one before; the TS-C connector is pushed into the new TS profile up to its centre marking and then unilaterally connected with a setscrew. With this type of connection, the TS profiles are able to expand or contract relatively stress-free in hot or cold conditions. The modular loads will be transmitted nonetheless.

Facing of TS profiles

The edges of TS profiles are faced using the TS end brackets TS-E. These are inserted at both ends of the TS profile and fixed in place with set screws. By means of this rail facing the modules will not slide out of the profiles even in bad weather.

3. Laying of cables and insertion of modules

In general, all cables are laid in parallel to the installed rails. They are attached to the universal profiles UP, UP-L or UP-S using cross cable clip blocks UP-K, which are inserted into the profile and fixed in place by turning them by 90°. Now the cables can be affixed to the profiles directly using cable clips. The cables are affixed to the TS profiles with the TS edge clips TS-EC. These are directly clipped to the TS profile. Now the cables are also affixed to the rails using cable clips.

In order to connect the cables, the modules are placed onto the bottom TS profiles. Once all cables have been laid, the solar modules are inserted into the mounting system in three steps. First, the modules are inserted into the top TS profile and then laid down on the lower profile. Finally, the solar modules are inserted into the lower profile. They are now held in place by gravity and must not be fixed in place by screws.

5 TRAPEZOIDAL SHEET ROOF

Use of either the insertion system or the clip system depends on the dimensioning of the PV system on the trapezoidal sheet roof.

The insertion system is the quicker installation version, as it only requires one adjustment on the drilling gauge. Where approved by the manufacturer, the modules can also be installed horizontally so less snow gets caught at the module joints.

The clip system is used for modules which are not approved for insertion systems. This type of installation allows for fractional adjustments of the position of a UP-TS profile if objects get in the way without having to shift the entire module field.

5.1 INSERTION SYSTEM

5.1.1 Tools

Installation requires the following tools:

- Cordless electric drill with a 6.5 mm drill bit
- Cordless riveting machine with special 17/42 BT nosepiece
- Allen key 3 mm
- TRI-STAND bending tool
- TRI-VENT drilling gauge

5.1.2 Installing the mounting system

The installation is divided into 5 steps:

1. **Adjusting the drilling gauge to the trapezoidal sheet and the module size**
2. **Measuring the bottom SafeClick row and predrilling the complete module field**
3. **Securing the rivetted SafeClicks**
4. **Attaching the TS profiles**
5. **Inserting the modules**

1. Adjusting the drilling gauge to the trapezoidal sheet and the module size
In order to protect the roof and the drilling gauge from damage during installation, the rubber rings on the upper crossbar of the drilling gauge are adjusted to rest on a raised bead.

Here, the guides of the drilling jig support must be symmetrically adjusted to the upper drill sleeve so that a space of 2 to 5 mm remains between trapezoidal sheet and drilling jig.

The right-hand drill sleeve is to be adjusted such that it is provided centred above the raised bead of the trapezoidal sheet. The lower drill sleeve is adjusted to the module insertion length + 11.5 mm to the upper drill sleeve.

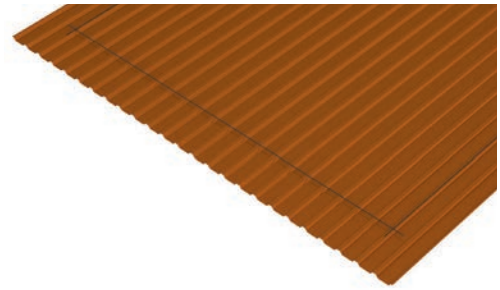

2. Measuring the bottom SafeClick row and predrilling the complete module field

After the substructure of the roof has been checked for its point bearing capacity, the module field is measured on the roof as dimensioned by the TRI-DESIGN software. The first and last SafeClick of the bottom row is then marked as in the dimensioning plan.

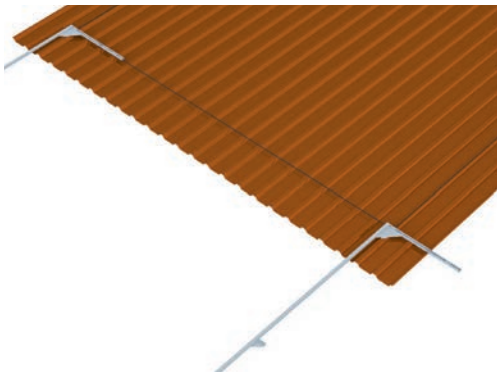

In a first step, the first SafeClick of the bottom row is predrilled at the point specified in the dimensioning using a diameter of 6.5 mm. The drilling gauge can be rotated 180° for easier handling. The last SafeClick of the bottom row is predrilled along the same lines.

Important: Always use the drilling gauge for all drilled holes to prevent slipping of the drill.

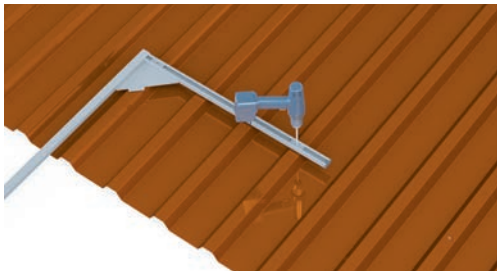

To mark the bottom SafeClick row, a piece of string is drawn from the first to the last drilled hole. The raised beads required can now be marked along the string. The number of raised beads ensues from the dimensioning plan and depends on the roof load, the thickness of the trapezoidal sheet and the distance of the raised beads.

The drilling gauge is now placed onto the marking and the SafeClick predrilled using the drill sleeve. For this, the drilling gauge can be rotated 180° for optimal positioning on the raised bead.

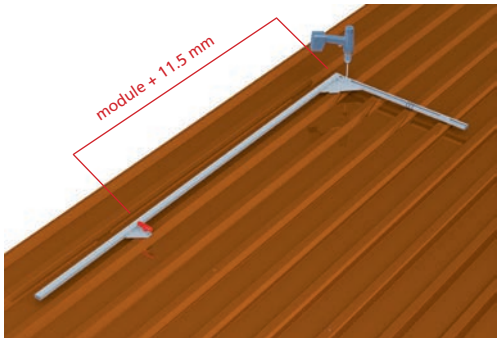

The locating pin is inserted into the bottom drill sleeve of the drilling gauge and into the predrilled hole of the bottom SafeClick row. The trapezoidal sheet is then predrilled using the upper locating sleeves and a drill with a diameter of 6.5 mm. The drilling gauge with the locating pin is subsequently re-set into the drill hole above it. Unless all raised beads are drilled, the drill holes should be offset. In each row a SafeClick is attached both to the first and the last raised bead.

3. Securing the rivetted SafeClicks
First, the sealing rivet is inserted from the top into the SafeClick and the sealing rubber is pressed onto the sealing rivet from underneath. The prepared SafeClicks are now placed into the predrilled holes on the roof. The leaf spring must face up. The rivet can then be driven using a cordless riveting machine.

Attention: Use a 17/42 BT nosepiece for the TRI-STAND sealing rivets.

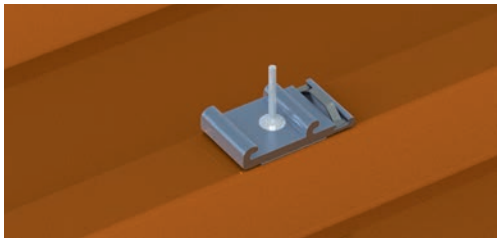

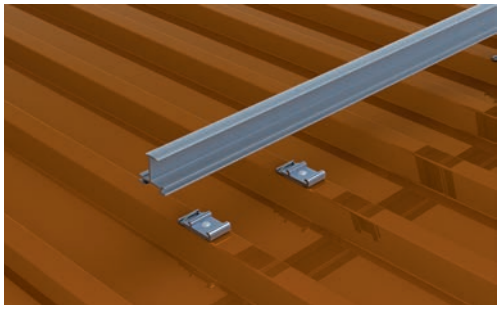

4. Attaching the TS profiles
When all SafeClicks are riveted (including any centre rails), the TS profiles can be clicked into place from the top. Once the TS profile is locked in place in the SafeClick, both rails are firmly and securely connected. Using the TS bending tool, each TS profile is now bent on the left and right of a SafeClick in the centre of the rail. This secures the rail against shifting as a result of heat or cold.

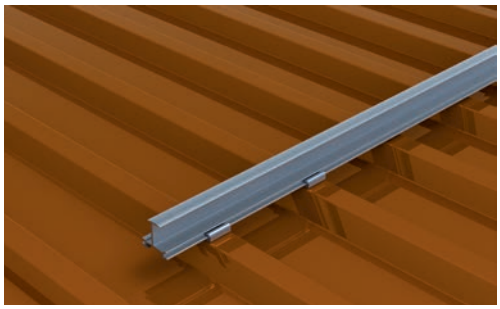

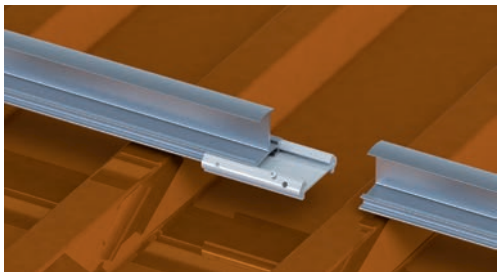

For systems wider than 6 m, the TS profiles are abutted using TS-C connectors. The TS-C connector is inserted into a mounted TS profile with the screw facing down until the connector is flush with the TS profile. The next TS profile is then attached to the previous one leaving a 3 mm gap. The TS-C connector is pushed into the new TS profile up to its centre marking and then fixed with a screw. This connection allows the TS profiles to expand in heat and contract in cold with relatively little stress while still transferring the module loads.

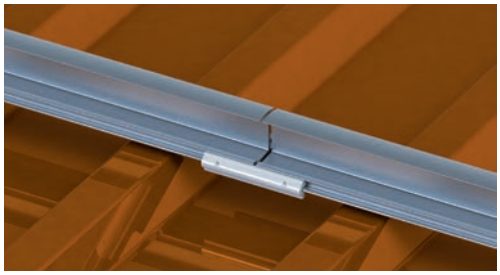

To allow the rails to expand, leave a gap of at least 3 mm between the TS profiles and the TS-C connectors. The screws of the TS-C connectors also need to face down and should only be screwed on one side.

Using the TS bending tool, each TS profile is now bent on the left and right of a SafeClick in the centre of the rail. This secures the rail against shifting as a result of heat or cold.

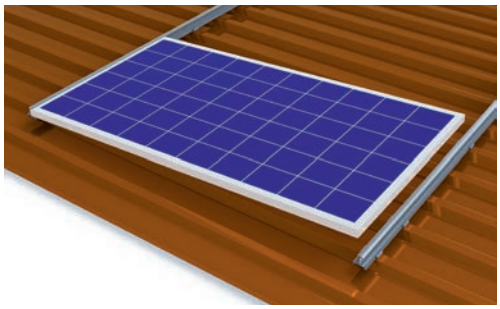

5. Inserting the modules

Once the TS rails have been attached, the string cables are laid and the modules inserted. To connect the cables, the modules are placed on end onto the bottom TS profiles so they can be easily connected. The modules are now inserted into the installation system in three steps. First, the modules are inserted into the top TS profile and then deposited on the bottom profile. They are then inserted into the bottom profile. The modules are now held in place by gravity and are securely fixed without screws.

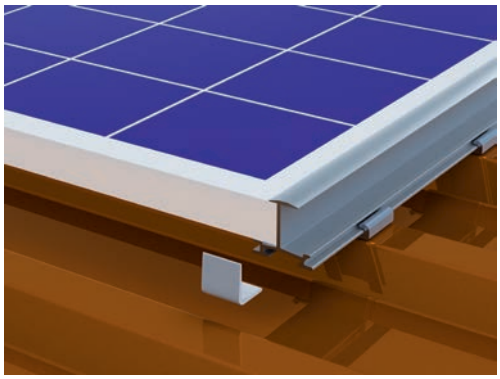

To secure the edge modules, end angles are attached to the ends of each module row.

Tip: When a TS profile ends on a raised bead, the screw of the end angle is difficult to access. Therefore, the end angles can be attached to the TS profile before it is installed.

5.2 CLIP SYSTEM

5.2.1 Tools

Installation requires the following tools:

- Cordless electric drill with a 6.5 mm drill bit
- Cordless riveting machine with special 17/42 BT nosepiece
- Allen key 6 mm
- TRI-STAND bending tool
- TRI-VENT drilling gauge

5.2.2 Installing the mounting system

The installation is divided into 5 steps:

1. **Adjusting the drilling gauge to the trapezoidal sheet and the module size**
2. **Measuring the bottom SafeClick row and predrilling the complete module field**
3. **Securing the rivetted SafeClicks**
4. **Attaching the UP-TS profiles**
5. **Clipping the modules**

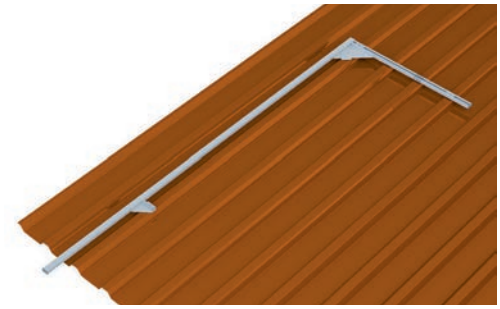

1. Adjusting the drilling gauge to the trapezoidal sheet and the module size
The two support pins on the angle piece are adjusted in such a way that the drill hole is in the centre of the raised bead and the distance between drilling gauge and raised bead is between 2 and 4 mm. For this, the pins are screwed symmetrically into the drill hole and adjusted for the right distance using washers. The top drill sleeve is adjusted to the distance of the raised beads.

1. Adjustment for the rail distances under the modules.
   For this, the bottom drill sleeve is adjusted to the installation hole spacing of the module used.

2. Adjustment for the rail distances between the module rows.
   For this, the drilling gauge is adjusted as follows:
   module length – installation hole spacing + 2 cm

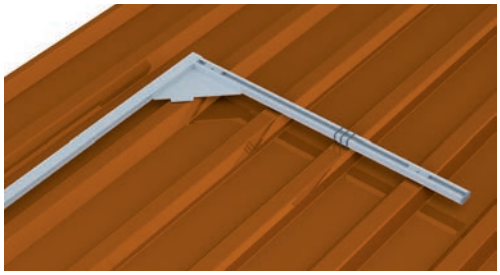

In order to protect the roof and the drilling gauge from damage during installation, the rubber rings on the upper crossbar of the drilling gauge are adjust to rest on a raised bead.

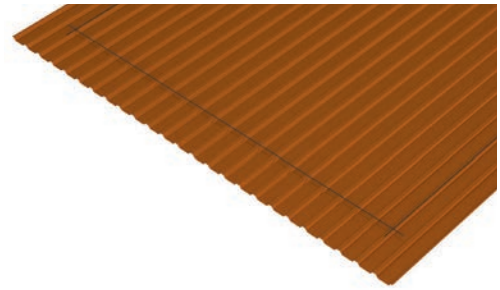

2. Measuring the bottom SafeClick row and predrilling the complete module field

After the substructure of the roof has been checked for its point bearing capacity, the module field is measured on the roof as dimensioned by the TRI-DESIGN dimensioning software. The first and last SafeClick of the bottom row is then marked as in the dimensioning plan.

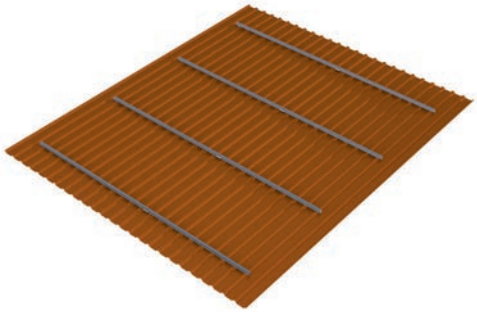

In a first step, the first SafeClick of the bottom row is predrilled at the point specified in the dimensioning using a diameter of 6.5 mm. The drilling gauge can be rotated 180° for easier handling. The last SafeClick of the bottom row is predrilled along the same lines.

Important: Always use the drilling gauge for all drilled holes to prevent slipping of the drill.

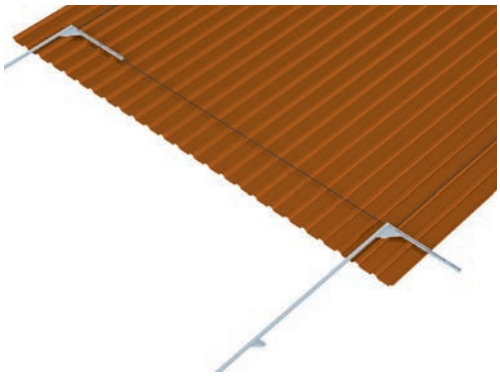

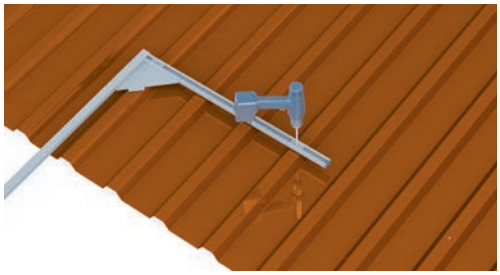

To mark the bottom SafeClick row, a piece of string is drawn from the first to the last drilled hole. The raised beads required can now be marked along the string. The number of raised beads ensues from the dimensioning plan and depends on the roof load, the thickness of the trapezoidal sheet and the distance of the raised beads.

The drilling gauge is now placed onto the marking and the SafeClick predrilled using the drill sleeve. For this, the drilling gauge can be rotated 180° for optimal positioning on the raised bead.

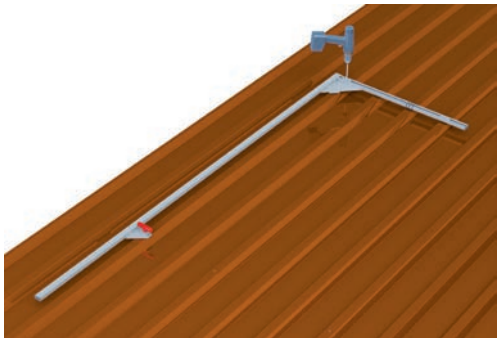

1. Adjusting the drilling gauge:

The locating pin is inserted into the bottom drill sleeve of the drilling gauge and into the predrilled hole of the bottom SafeClick row. The row of drill holes above it is then predrilled using a drill with a diameter of 6.5 mm. The drilling gauge must always be offset here.

Unless all raised beads are drilled, the drill holes should be offset. In each row a SafeClick is attached both on the first and the last raised bead.

2. Adjusting the drilling gauge:
The locating pin is inserted into the bottom drill sleeve of the drilling gauge and into the predrilled hole of the second SafeClick row from the bottom. The row of drill holes above it is then predrilled using a drill with a diameter of 6.5 mm. The drilling gauge must always be offset here.

3. Securing the rivetted SafeClicks
First, the sealing rivet is inserted from the top into the SafeClick and the sealing rubber is pressed onto the sealing rivet from underneath. The prepared SafeClicks are now placed into the predrilled holes on the roof. The leaf spring must face up. The rivet can then be driven using a cordless riveting machine.

Attention: Use a 17/42 BT nosepiece for the TRI-STAND sealing rivets.

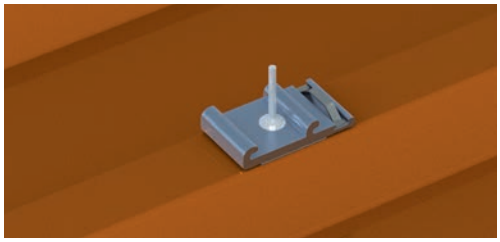

4. Attaching the UP-TS profiles
When all SafeClicks are riveted, the UP-TS profiles can be clicked into place from the top. Once the TS profile is locked in place in the SafeClick, both rails are firmly and securely connected. Using the TS bending tool, each UP-TS profile is now bent on the left and right of a SafeClick in the centre of the rail. This secures the rail against shifting as a result of heat or cold.

For systems wider than 6 m, the UP-TS profiles are abutted using TS-C connectors. The TS-C connector is inserted into a mounted UP-TS profile with the screw facing down until the connector is flush with the UP-TS profile.

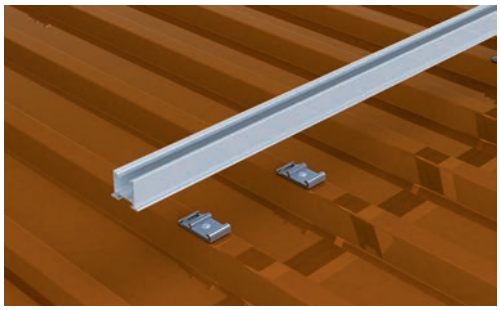

The next UP-TS profile is then attached to the previous one with a 3 mm gap, the TS-C connector is pushed into the new TS profile up to its centre marking and then fixed with a screw. This connection allows the TS profiles to expand in heat and contract in cold with relatively little stress while still transferring the module loads.

Important: The module field width for the clip system must not exceed 12 m. For larger roofs, simply create a new module field.

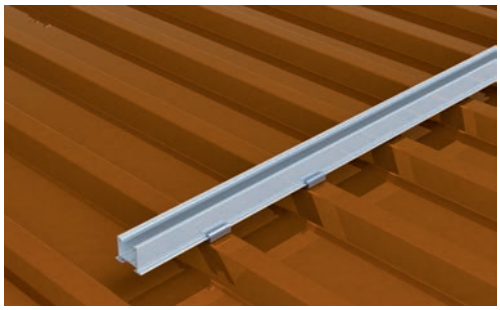

5. Clipping the modules
All cables are laid parallel to the fitted rails. They are attached to the UP-TS profiles using the EdgeClips, which are pressed into the support foot of the bottom profile. Using the cable ties of the EdgeClips, the cables are secured directly to the profiles.

Once all connectors have been laid, the solar modules are clipped in place. For this, the end clips are attached to one end of the UP-TS profiles. They are inserted from the top into the profile and secured by turning them 90°. The module is now inserted from the side and secured by tightening the screw. Care must be taken to ensure that the end angles are flush with the module frame.

Once the first module is attached to the outer side using the appropriate end

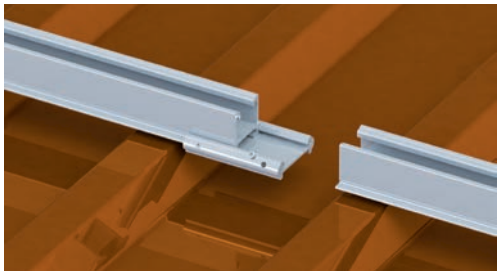

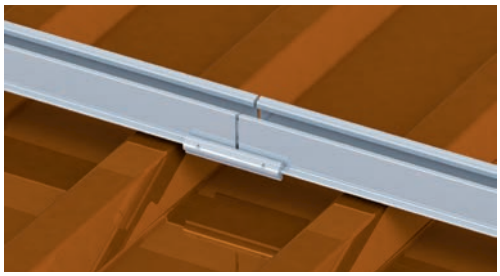

clips, the centre clips are attached. Again, these are inserted into the profile and secured by turning them 90°. When the next module has been inserted, both modules are secured by tightening the screw. These steps are repeated right through to the last module of a row. This is then secured as before using the appropriate end clip.

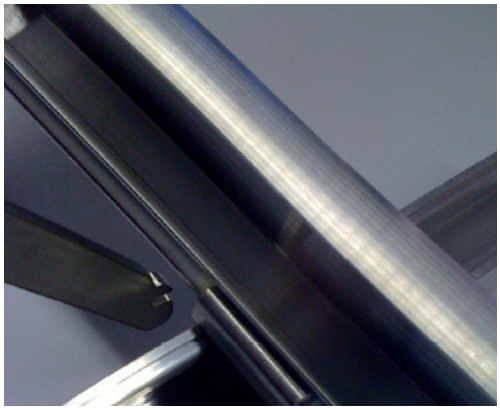

Annex: Use of the TRI-STAND bending tool

The TS profiles must each be edge-bent per profile left and right of a SafeClick located in the centre of the TS rail. This measure will limit the movement of profiles as a result of temperature changes.

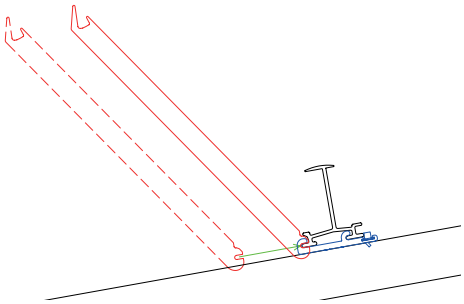

1. Fix TS profile in place

Push bending tool into the lower leg of the TS profile.

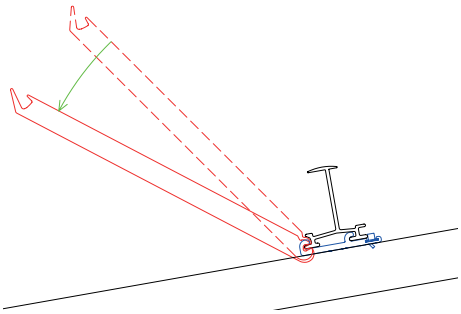

Turn the bending tool by 8 – 10 cm toward the bottom.

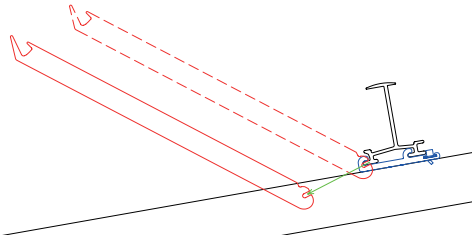

Pull out the bending tool again and repeat the same steps on the left side of the SafeClick.

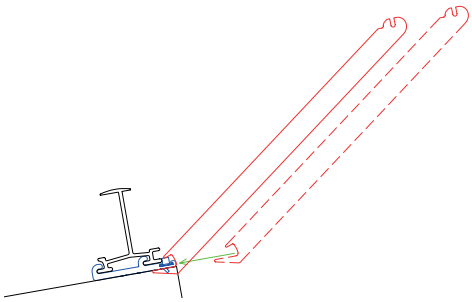

2. Subsequently loosen SafeClick
Push bending tool from the top over the flat spring of the SafeClick.

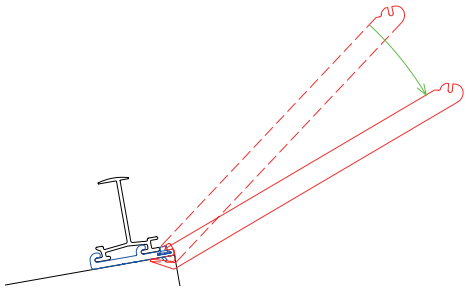

Turn the bending tool toward the bottom all the way to the stop.

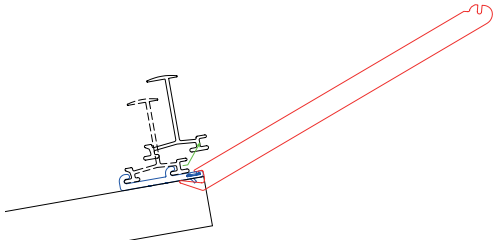

Push TS profile toward the top and remove.

The General Terms and Conditions of TRITEC apply.

Made in Switzerland

Subject to technical changes.

info@tritec-energy.com